324301

24225

3 Hours / 70 Marks Seat No. | | | | | | | | |

Instructions – (1) All Questions are *Compulsory.*

(2) Answer each next main Question on a new page.

(3) Illustrate your answers with neat sketches wherever necessary.

(4) Figures to the right indicate full marks.

(5) Assume suitable data, if necessary.

(6) Mobile Phone, Pager and any other Electronic Communication devices are not permissible in Examination Hall.

Marks

1. Attempt any FIVE of the following : 10

a) Define estimating and costing.

b) Which software is commonly used for preparing estimate.

c) Draw the format of rate analysis.

d) Define detailed estimate.

e) State standard mode of measurement for following items.

i) DPC

ii) Wood work for door

iii) Skirting

iv) Ornamental cornice

f) Define rate analysis.

g) Define contract

Marks

2. Attempt any THREE of the following : 12

a) Explain in brief revised estimate and supplementry estimate.

b) Describe in brief centre line method for taking out quantities.

c) Describe the rate analysis for cement concrete foundation 1:4:8.

d) Explain the procedure of submitting filled tender document.

3. Attempt any THREE of the following : 12

a) Describe D.S.R. and state its use.

b) Work out quantities of following items of work and enter the same in standard format of measurement sheet by total centre line method.

i) Excavation for foundation

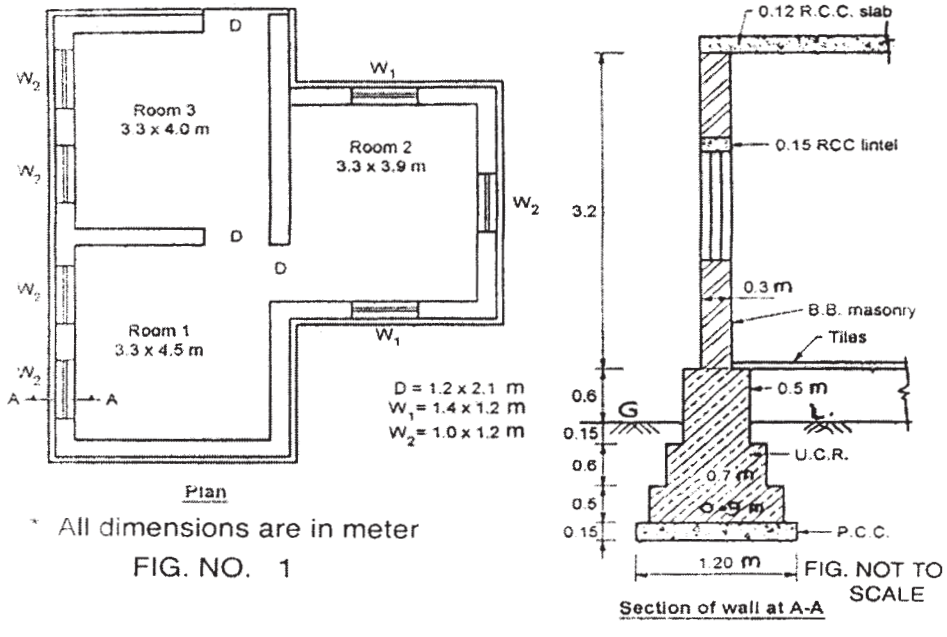

Fig. No. 1

c) Prepare rate analysis for plastering 12 mm thick in C.M. 1:3.

d) Describe the process of E tendering.

Marks

4. Attempt any THREE of the following : 12

a) Prepare the cheek list of items to be executed with units for detailed estimate for RCC framed structure.

b) Work out DPC at plinth for following Fig. No. 2.

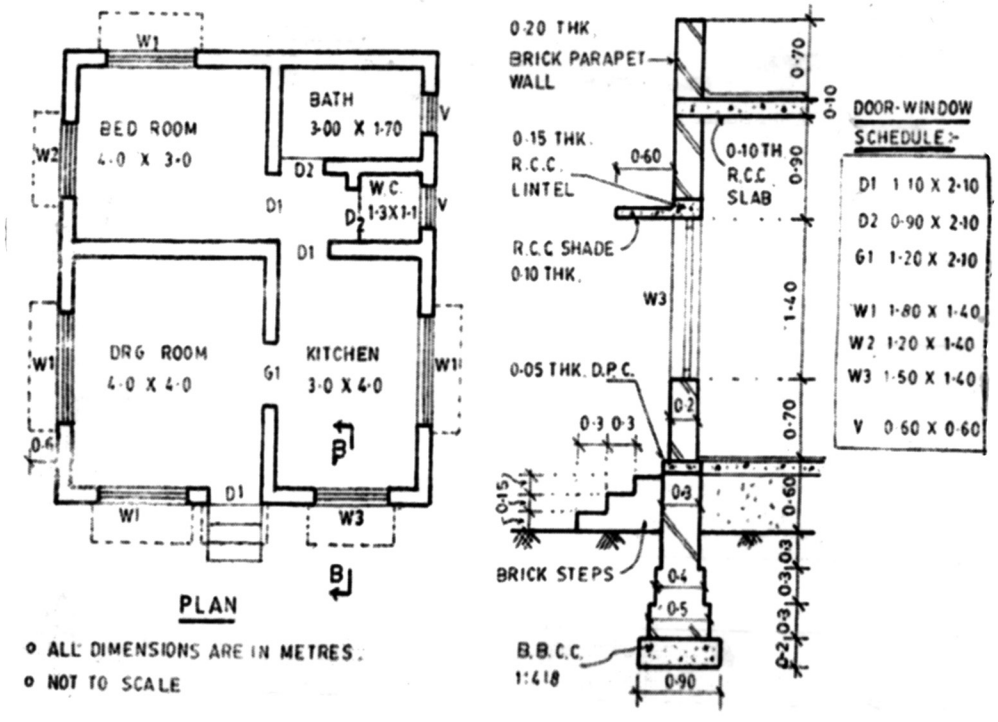

Fig. No. 2

c) Describe the general procedure of carrying out rate analysis for interior design project.

d) State eight points to be included while drafting tender notice.

e) Classify the different type of contract for an architectural/interior design project.

5. Attempt any TWO of the following : 12

a) State and explain different E-tool required for interior design.

b) Explain the items of work as they relate to the architectural / interior design project.

c) Calculate the quantity of cement and sand for following

i) 35 m^3 of PCC in 1:3:6

ii) 180 m^2 of cement plaster 20 mm thick in C.M. 1:4.

Marks

6. Attempt any TWO of the following : 12

a) Work out quantities of the following any three items of work from following Fig. No. 3.

i) Earth work in Excavation

ii) PCC 1:4:8

iii) U.C.R. Masonary in foundation

iv) Mosaic flooring.

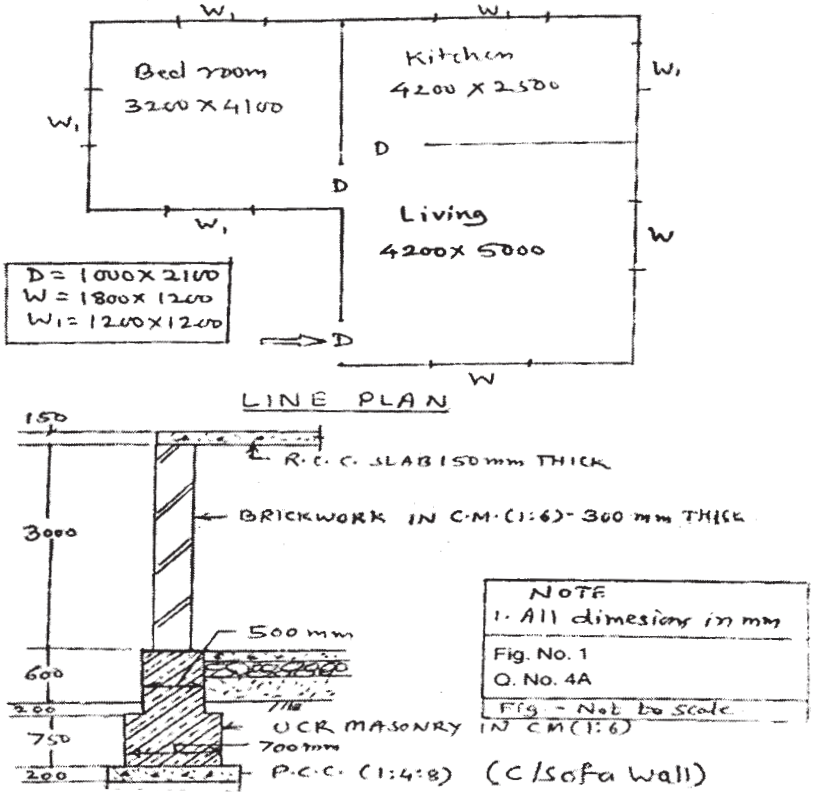

Fig. No. 3

b) Explain principles of estimation and mode of measurement.

c) Define –

i) Lead

ii) Lift

iii) Task work